REV	DRAWING REVISION / DESCRIPTION	DRAWN DATE	CHECK DATE	APPVD DATE

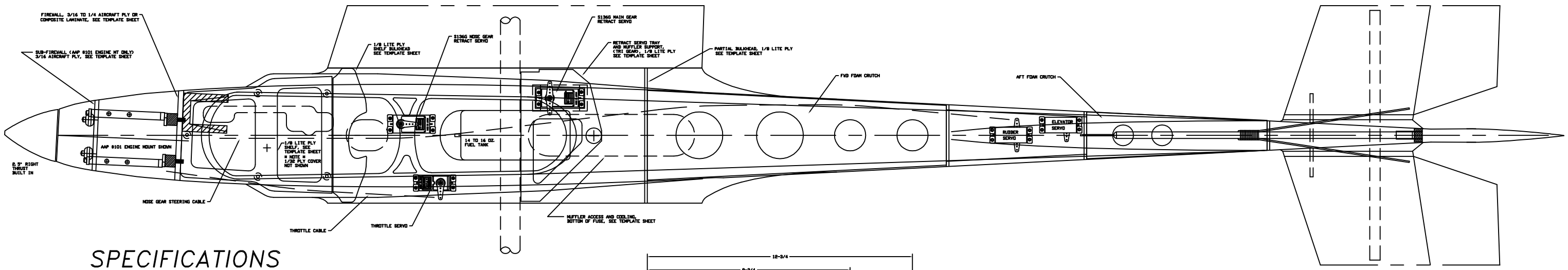

TOP VIEW

SPECIFICATIONS

FUSE LENGTH:	75”
WING SPAN:	70-3/4”
WING AREA:	987.3 sq”
WING AR:	5.07
STAB SPAN:	33-1/2”
STAB AREA:	255.1 sq”
STAB AR:	4.40
AREA % STAB/WING:	25.8%
ENGINE:	1.20 4-CYCLE
WEIGHT:	9-1/2 TO 10 LBS

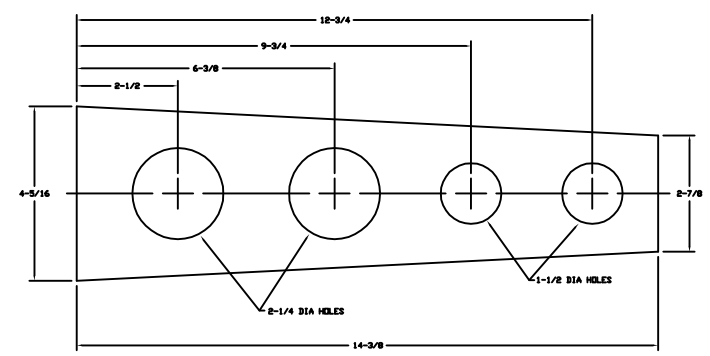

FWD FOAM CRUTCH DETAIL, 1/2 TO 3/4 THK WHITE FOAM

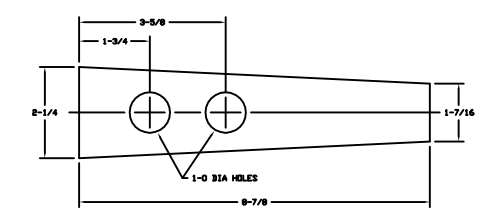

AFT FOAM CRUTCH DETAIL, 1/2 TO 3/4 THK WHITE FOAM

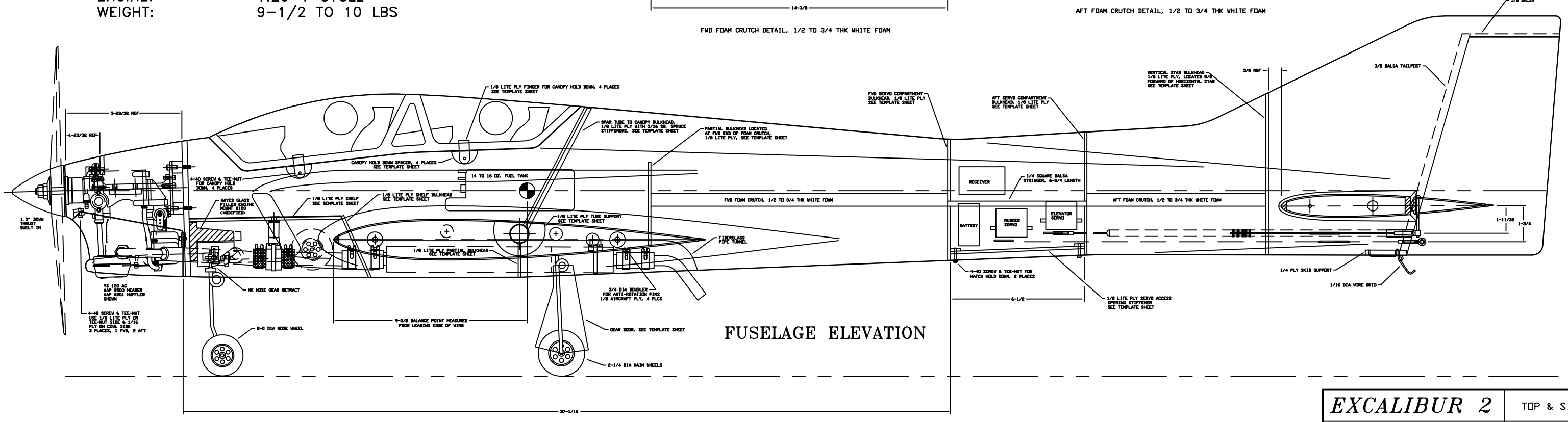

FUSELAGE ELEVATION

EXCALIBUR 2	TOP & SIDE
DESIGNED BY STEVE STRICKER	SCALE: 4/10
ACAD DWG BY KELLY JACOBSEN	11/4/93
ALL RIGHTS RESERVED SS PRODUCTS	SHEET 1 OF 5